THIS COPY IS PROVIDED ON A RESTRICTED BASIS AND IS NOT TO BE USED IN ANY WAY DETRIMENTAL TO THE INTERESTS OF PANDUIT CORP.

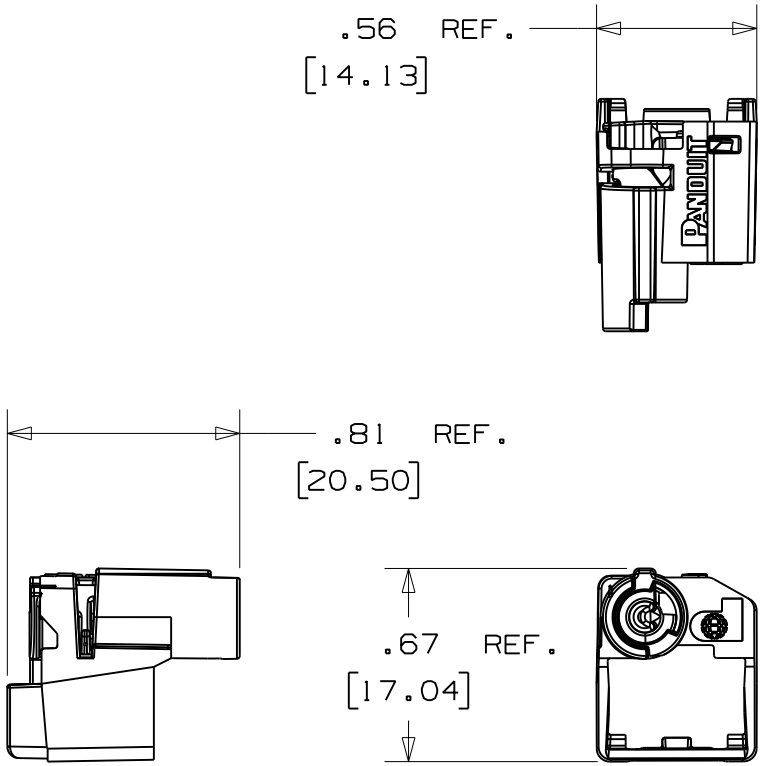

PSL-DCPLS

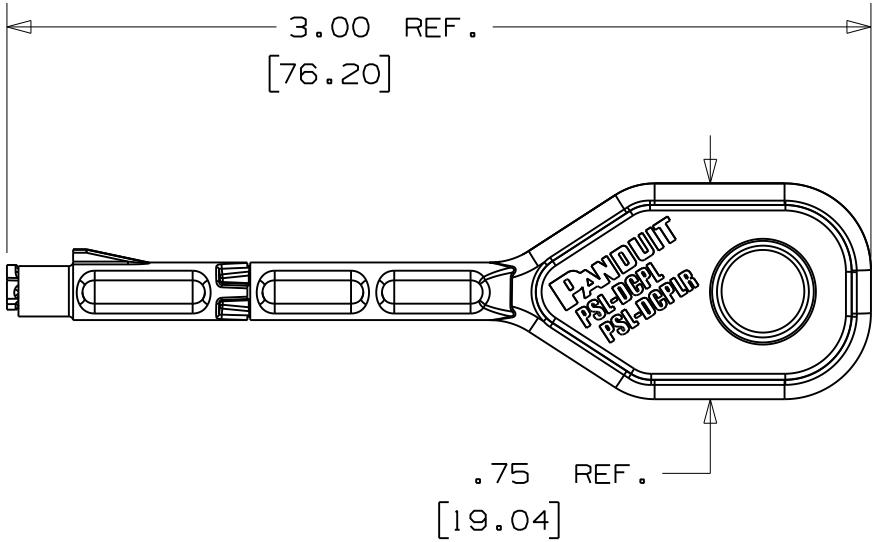

KEY

REV	DATE	BY	CHK	DESCRIPTION	ECN	-	R	CUST	SUP
1	03/31/09	MROB		DRAWING RELEASED	5722		1		

CAD FILENAME/LAYERS: 100913AB_DC_C10774/00

PANDUIT CORP. TINLEY PARK, ILLINOIS

PSL-DCPLS

UNLESS OTHERWISE SPECIFIED, DIMENSIONAL TOLERANCES ARE:
(.X) ± .05 (.XXX) ± .010
(.XX) ± .02 ANGLES ± 2°

UNLESS OTHERWISE SPECIFIED, ALL DIMENSIONS ARE GIVEN IN INCHES, THIRD ANGLE PROJECTION.

DRAWN BY: MROB
DATE: 03/31/09
CHK'D:

MAT'L: LOCK-IN POLYCARBONATE KEY 10% GF NYLON

SCALE: 1.5:1

DRAWING NO.: C10774

DWG SIZE: A