TOP VIEW

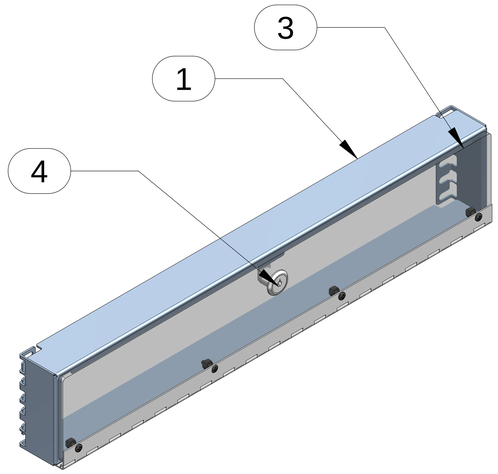

ISOMETRIC

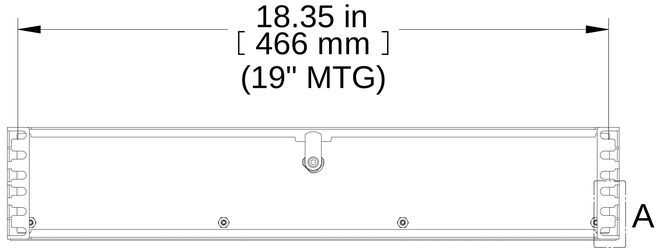

REAR VIEW

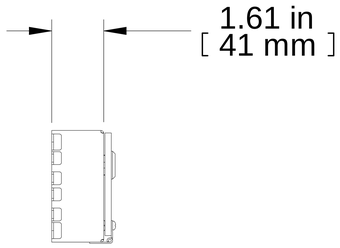

SIDE VIEW

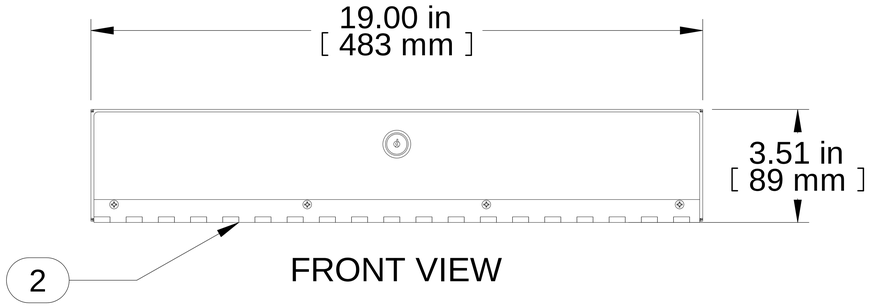

FRONT VIEW

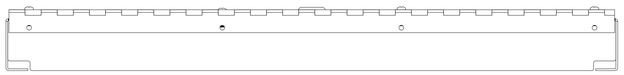

BOTTOM VIEW

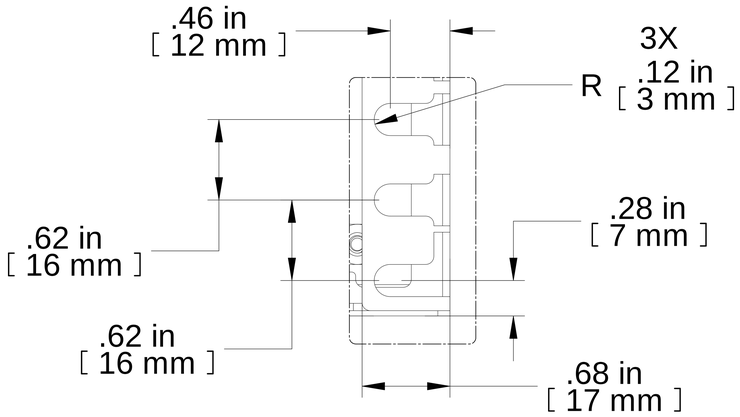

DETAIL A

Item Number	Title	Quantity
1	SECURITY COVER FRAME	1
2	HINGE ASSEMBLY	1
3	SMOKED PLEXI GLASS (5MM)	1
4	LOCK KEY-LOCK W/NUT 7.5MM	1

PART NUMBERS

RMSC1902BK1 PAINTED BLACK TEXTURED

NOTES

Does not include mounting hardware.
See Hammond Website for More Information

Français

Pour tous les détails sur nos produits,
svp veuillez consulter notre site www.hammondmfg.com

Data subject to change without notice. Isometric drawing not to scale.
Les données sont sujettes à changement sans préavis.

HAMMOND MANUFACTURING®

www.hammondmfg.com

PART NO. **RMSC1902**